Work Order ID 62355

Tuesday, September 28, 2010 11:19:30 AM

Item ID: D2013-3 **Accept** **Setup Start** **Stop**

Revision ID:

Item Name: Mirror Bracket LH, 212

Start Date: 9/28/2010 **Start Qty:** 4.00 **Cust Item ID:**

Required Date: 10/5/2010 **Req'd Qty:** 4.00 **Customer:**

Reference:

Approvals: **Process Plan:** N **Date:** 10-9-28 **Tooling:** _____ **Date:** _____ **Run Start** **Stop**

QC: _____ **Date:** _____ **SPC (Y/N):** _____ **Date:** _____

Sequence ID/ Work Center ID	Operation Description	Set Up/ Run Hours	Tool ID	Tool #	Plan Code	Accept Qty	Reject Qty	Reject Number	Insp. Stamp
Draw Nbr	**Revision Nbr**								
D2013	Rev C								
100	NC BRAKE	0.00				4			
Brake NC	**Memo**	0.00							
Brake NC	1-Punch as per template D2013-T3 and Dwg D2013 SB 10/09/30 2-Flatten ends of D2013-3 tube as per Dwg D2013 using DT8545 3-Bend (1) tube as per Dwg D2013 using Jig DT8201 Identify as D2013-3. 4-Deburr as required =7 m.l 10/10/12					4X			
110	QC5- Inspect part completeness to step on W/O	0.00				4			
QC	**Memo**	0.00							
Quality Control						=3			

Dart Aerospace Ltd

W/O:		WORK ORDER CHANGES					
DATE	STEP	PROCEDURE CHANGE	By	Date	Qty	Approval Chief Eng / Prod Mgr	Approval QC Inspector

Part No: _____ **PAR #:** _____ **Fault Category:** _____ **NCR:** Yes No **DQA:** _____ **Date:** _____

Resolution: _____ **Disposition:** _____ **QA: N/C Closed:** _____ **Date:** _____

NCR:		WORK ORDER NON-CONFORMANCE (NCR)						
DATE	STEP	Description of NC Section A	Corrective Action Section B			Verification Section C	Approval Chief Eng	Approval QC Inspector
			Initial Chief Eng	Action Description Chief Eng	Sign & Date			

NOTE: Date & initial all entries

H:\fFORMS\Quality Assurance\approved QA\NCRWO RevE

Work Order ID 62355

Tuesday, September 28, 2010 11:19:30 AM

Item ID: D2013-3 **Accept** **Setup Start**

Revision ID:

Item Name: Mirror Bracket LH, 212 **Stop**

Start Date: 9/28/2010 **Start Qty:** 4.00 **Cust Item ID:**

Required Date: 10/5/2010 **Req'd Qty:** 4.00 **Customer:**

Reference:

Approvals: **Process Plan:** _____ **Date:** _____ **Tooling:** _____ **Date:** _____ **Run Start**

QC: _____ **Date:** _____ **SPC (Y/N):** _____ **Date:** _____ **Stop**

Sequence ID/ Work Center ID	Operation Description	Set Up/ Run Hours	Tool ID	Tool #	Plan Code	Accept Qty	Reject Qty	Reject Number	Insp. Stamp
120	Identify as per dwg & Stock Location: WA025	0.00							
Packaging									
Packaging	**Memo**	0.00							
130	QC21- Final Inspection - Work Order Release	0.00							
QC									
Quality Control	**Memo**	0.00							

10-10-14

10/10/14

MF 10-10-14

Dart Aerospace Ltd

W/O:		WORK ORDER CHANGES					
DATE	STEP	PROCEDURE CHANGE	By	Date	Qty	Approval Chief Eng / Prod Mgr	Approval QC Inspector

Part No: _____ **PAR #:** _____ **Fault Category:** _____ **NCR:** Yes No **DQA:** _____ **Date:** _____

Resolution: _____ **Disposition:** _____ **QA: N/C Closed:** _____ **Date:** _____

NCR:		WORK ORDER NON-CONFORMANCE (NCR)						
DATE	STEP	Description of NC Section A	Corrective Action Section B			Verification Section C	Approval Chief Eng	Approval QC Inspector
			Initial Chief Eng	Action Description Chief Eng	Sign & Date			

NOTE: Date & initial all entries

H:\fFORMS\Quality Assurance\approved QA\NCRWO RevE

Picklist Print

Thursday, September 30, 2010 11:31:29 AM

Work Order ID: 62355

Parent Item: D2013-3

Parent Item Name: Mirror Bracket LH, 212

Start Date: 9/28/2010 **Required Date:** 10/5/2010

Start Qty: 4.00 **Required Qty:** 4.00

Comments: IPP Rev:A New Issue 05-11-01 JLM

Component Item ID/ Item Name	Replacement Item ID	Mfg/ Purch	Bin Item	Primary Location	Last Location	Route Seq ID	Unit of Measure	Qty on Hand	Qty per Kit	Total Qty	Qty Issued	Date Issued	Status
M304TR0.750W.049 304 RD Tube .750 x .049W		Purchased	No				f	160.1990	1.9473	1.9473			

Location		Loc Qty	Loc Code
MAT		132.33549	
	108498	0	
	110113	0	
	114482	6.6065	
	114852	79.08684	
	115010	46.64215	
MAT017		27.8635	
	109314	9.33	
	110113	5.29	
	112800	13.2435	

9 SB 10/09/30 (4)

DESIGN	DRAWN BY	DART AEROSPACE LTD HAWKESBURY, ONTARIO, CANADA
JB.	RF	
CHECKED: KE	APPROVED: [illegible]	DRAWING NO. D2013 — REV. C — SHEET 1 OF 3
DATE: 99.06.07		TITLE: MIRROR BRACKET — SCALE: NTS

A	90.10.22	NEW ISSUE
B	94.06.15	REDRAWN
C	99.06.07	REDRAWN, CHANGE OF DIMENSIONS

SHOP COPY
RETURN TO
ENGINEERING
UNCONTROLLED COPY
SUBJECT TO AMENDMENT
WITHOUT NOTICE
WORK ORDER
NO. 42355
RS 10-9-21

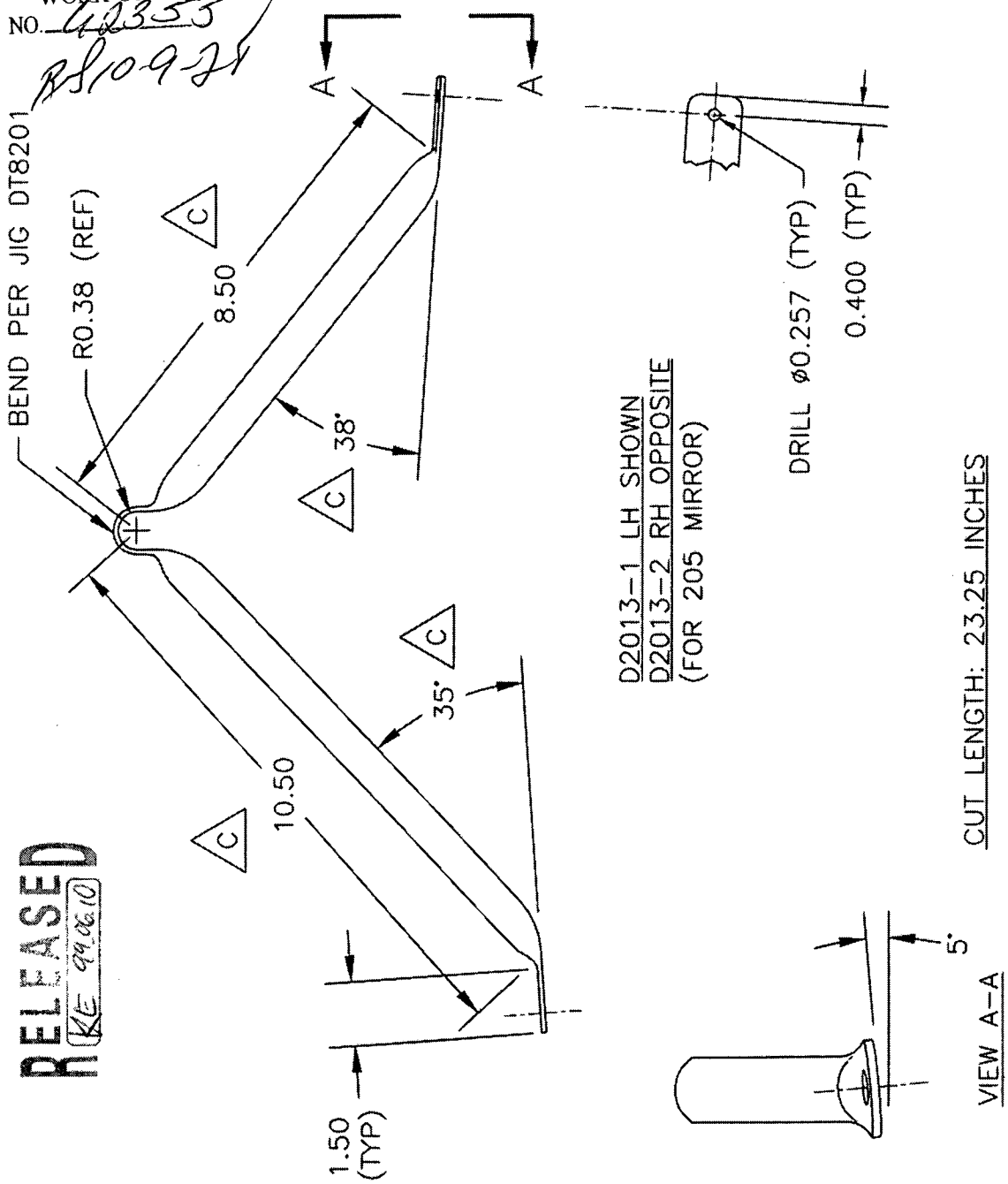

RELEASED
KE 99.06.10

Copyright 1990 by DART AEROSPACE LTD

Dart Aerospace Ltd

W/O:		WORK ORDER CHANGES					
DATE	STEP	PROCEDURE CHANGE	By	Date	Qty	Approval Chief Eng / Prod Mgr	Approval QC Inspector

Part No: _____ **PAR #:** _____ **Fault Category:** _____ **NCR:** Yes No **DQA:** _____ **Date:** _____

Resolution: _____ **Disposition:** _____ **QA: N/C Closed:** _____ **Date:** _____

NCR:		WORK ORDER NON-CONFORMANCE (NCR)						
DATE	STEP	Description of NC Section A	Corrective Action Section B			Verification Section C	Approval Chief Eng	Approval QC Inspector
			Initial Chief Eng	Action Description Chief Eng	Sign & Date			

NOTE: Date & initial all entries

H:\fFORMS\Quality Assurance\approved QA\NCRWO RevE

RELEASED
KE 99.06.10

w/o 62355

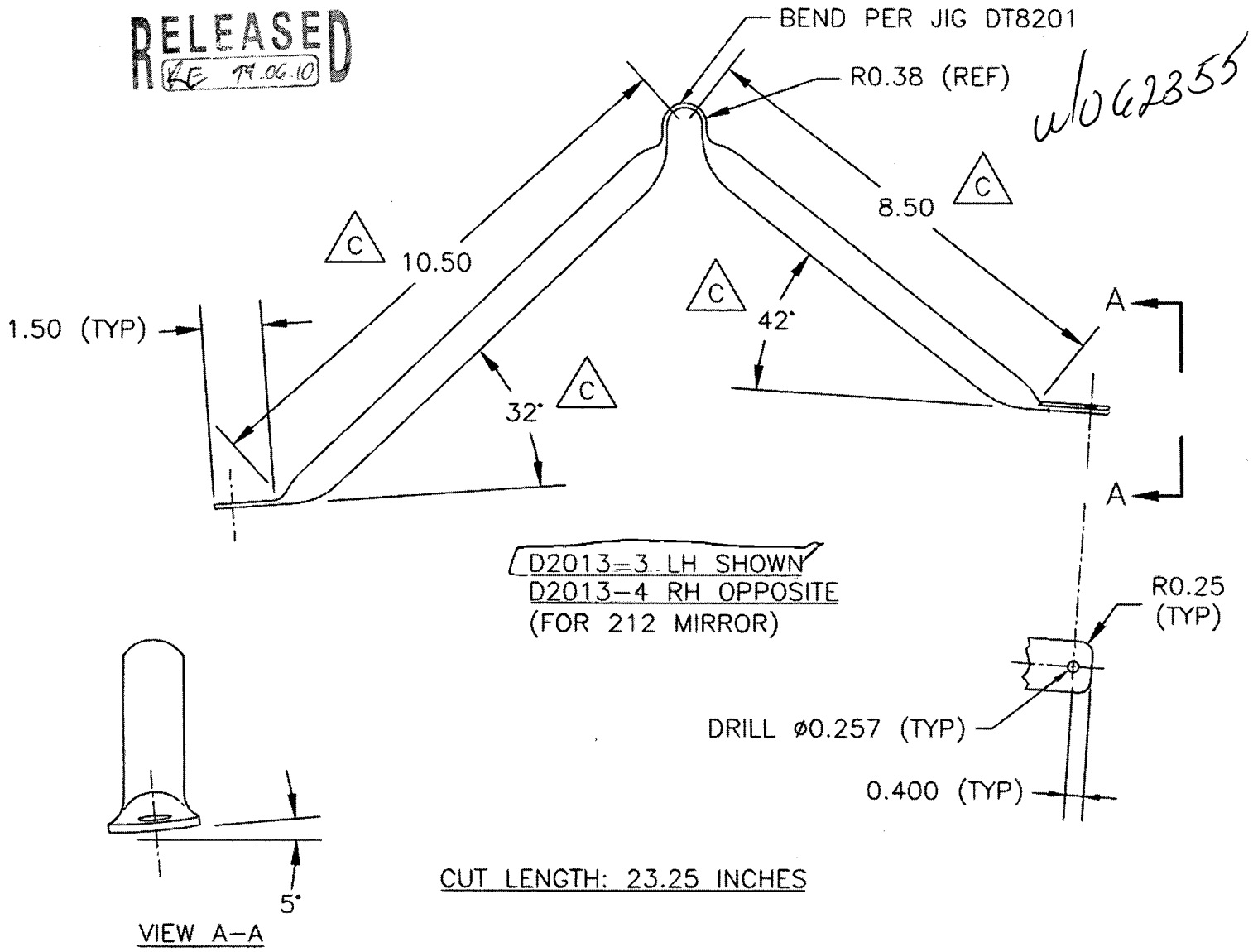

D2013-3 LH SHOWN
D2013-4 RH OPPOSITE
(FOR 212 MIRROR)

VIEW A-A

CUT LENGTH: 23.25 INCHES

MATERIAL: AISI 304/316 SS SEAMLESS TUBE,
0.750 O.D. x 0.049 WALL

DART

QA COPY ISSUED

DESIGN	DRAWN BY	DART AEROSPACE LTD HAWKESBURY, ONTARIO, CANADA	
JB	RF		
CHECKED	APPROVED	DRAWING NO.	REV. C
KE		D2013	SHEET 2 OF 3
DATE		TITLE	SCALE
99.06.07		MIRROR BRACKET	NTS

Copyright 1990 by DART AEROSPACE LTD

Dart Aerospace Ltd

W/O:		WORK ORDER CHANGES					
DATE	STEP	PROCEDURE CHANGE	By	Date	Qty	Approval Chief Eng / Prod Mgr	Approval QC Inspector

Part No: _____ **PAR #:** _____ **Fault Category:** _____ **NCR:** Yes No **DQA:** _____ **Date:** _____

Resolution: _____ **Disposition:** _____ **QA: N/C Closed:** _____ **Date:** _____

NCR:		WORK ORDER NON-CONFORMANCE (NCR)						
DATE	STEP	Description of NC Section A	Corrective Action Section B			Verification Section C	Approval Chief Eng	Approval QC Inspector
			Initial Chief Eng	Action Description Chief Eng	Sign & Date			

NOTE: Date & initial all entries

H:\fFORMS\Quality Assurance\approved QA\NCRWO RevE

RELEASED
KE 99.06.10

w/o 62355

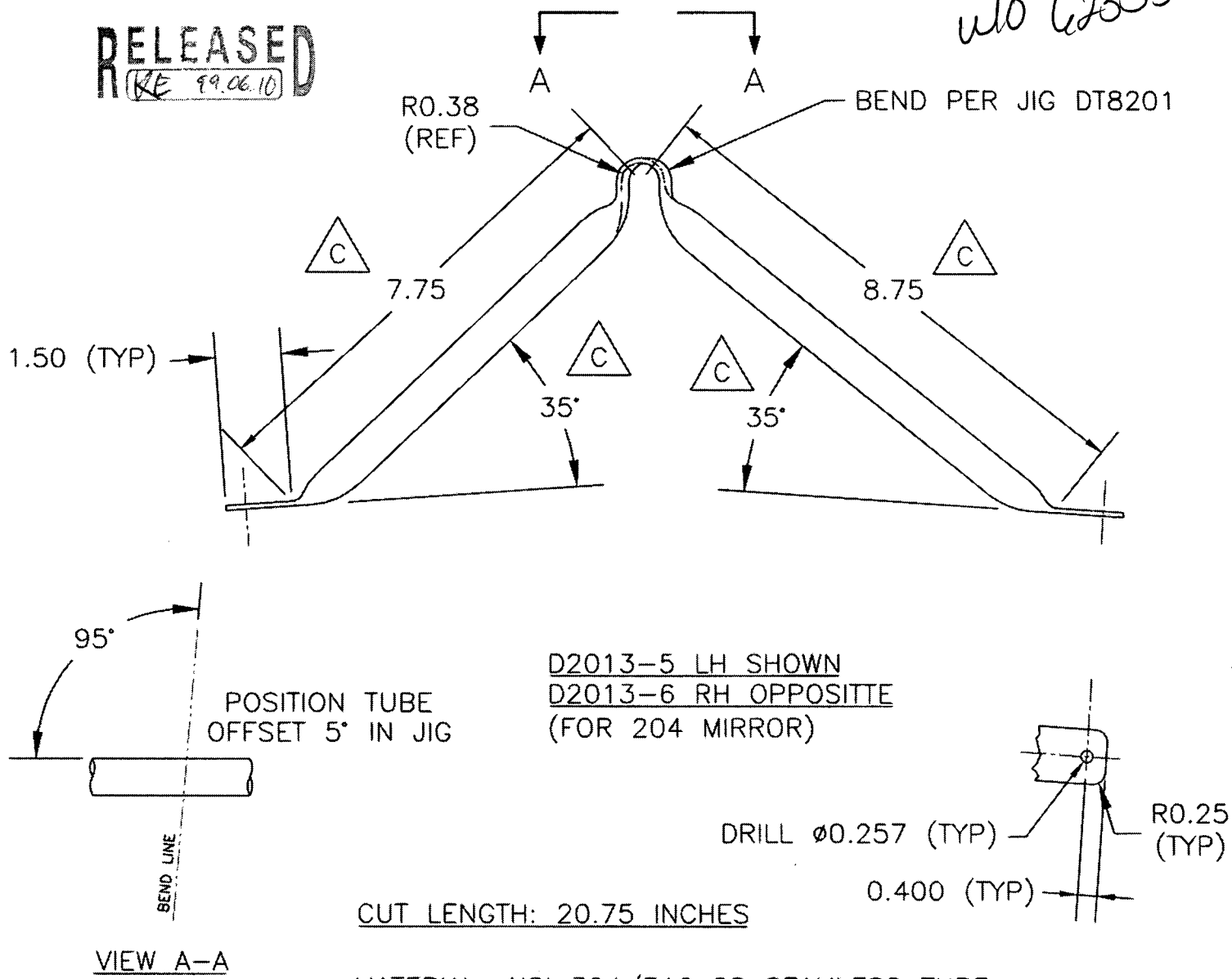

DART

COPY ISSUED

DESIGN	DRAWN BY	DART AEROSPACE LTD HAWKESBURY, ONTARIO, CANADA	
JB	RB		
CHECKED	APPROVED	DRAWING NO.	REV. C
KE		D2013	SHEET 3 OF 3
DATE		TITLE	SCALE
99.06.07		MIRROR BRACKET	NTS

Copyright 1990 by DART AEROSPACE LTD

Dart Aerospace Ltd

W/O:		WORK ORDER CHANGES					
DATE	STEP	PROCEDURE CHANGE	By	Date	Qty	Approval Chief Eng / Prod Mgr	Approval QC Inspector

Part No: _____ **PAR #:** _____ **Fault Category:** _____ **NCR:** Yes No **DQA:** _____ **Date:** _____

Resolution: _____ **Disposition:** _____ **QA: N/C Closed:** _____ **Date:** _____

NCR:		WORK ORDER NON-CONFORMANCE (NCR)						
DATE	STEP	Description of NC Section A	Corrective Action Section B			Verification Section C	Approval Chief Eng	Approval QC Inspector
			Initial Chief Eng	Action Description Chief Eng	Sign & Date			

NOTE: Date & initial all entries

H:\fFORMS\Quality Assurance\approved QA\NCRWO RevE